REVISIONS			
REV.	DESCRIPTION	DATE	APPROVED
1	INITIAL RELEASE OF DRAWING	5/28/2014	BS

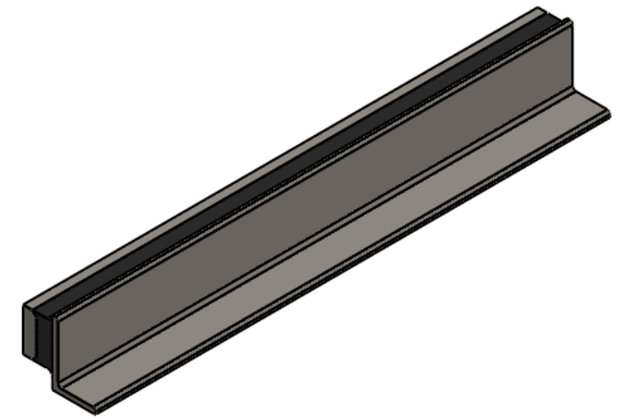

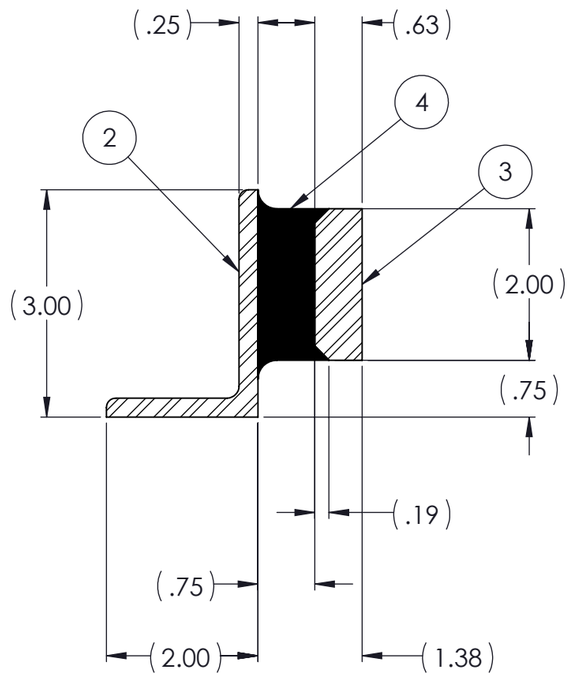

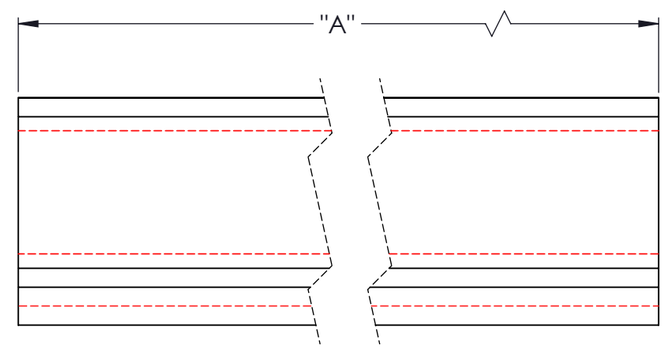

QTY.	DESCRIPTION	PART NUMBER	MATERIAL OR NOTES	ITEM
AR	ELASTOMER	K12-4	1	4
1	PLATE	MK120B		3
1	L	MK120A		2
	K12	K12		1

NOTES:

1. MATERIAL: ELASTOMER TO BE SPECIFIED, DUROMETER 50.
2. DIMENSION "A" IS TO BE MANUFACTURED IN 6" AND 24" LENGTHS.
3. ALL DIMENSIONS ARE REFERENCE.

PROPRIETARY AND CONFIDENTIAL

THE INFORMATION CONTAINED IN THIS DRAWING IS THE SOLE PROPERTY OF KARMAN RUBBER. ANY REPRODUCTION IN PART OR AS A WHOLE WITHOUT THE WRITTEN PERMISSION OF KARMAN RUBBER IS PROHIBITED.

	SIGNATURE	DATE
DRAWN	B. SENECAL	05/28/2014
CHECK	S. BROWN	05/28/2014
ENGR	B. SENECAL	05/28/2014
QA		
STRESS		
APPR		

UNLESS OTHERWISE SPECIFIED:
DIMENSIONS ARE IN INCHES
TOLERANCES:
.X =
.XX = ± 0.031
.XXX =
ANGLES = ±1°
INTERPRET GEOMETRIC TOLERANCING PER: ASME Y14.5M-1994

KARMAN RUBBER VIBRO-INSULATORS®
FOR CONTROLLING NOISE, SHOCK & VIBRATION

TITLE:
K12 CONTINUOUS STRIP VIBRO-INSULATOR
WWW.KARMAN.COM

SIZE	CAGE CODE	DWG. NO.	REV
B		K12	1

DO NOT SCALE DRAWING | SCALE: 1:2 | WEIGHT: .71 LBS/IN | SHEET 1 OF 1